Uhlmann & Zacher

# CX2172

Clex private
Electronic door handle
in rosette fitting


# Operating and Assembly Manual

Imprint

Operating and assembly manual (english)
Electronic door handle CX2172

Document number: 070A

Version: 1.24

Status as on: 24.04.2017

Manufacturer

Uhlmann & Zacher GmbH
Gutenbergstraße 2–4
97297 Waldbüttelbrunn
Germany
Phone: +49 931 40672-0
E-Mail: contact@UundZ.de
http://www.UundZ.de

# Table of contents

# 1 About this document

This operating and assembly manual describes the Clex private electronic door handle in rosette fitting (in short: CX2172). It is part of the product and contains important information that is necessary for proper operation and maintenance.

This operating and assembly manual is valid for all versions of CX2172 and is intended for technicians, who are responsible for assembling and disassembling, as well as for end customers.

- Read this operating and assembly manual carefully for smooth and safe operation and follow the instructions given in it before operating the door handle.
- Keep the operating and assembly manual in a safe place.
- After the installation, hand over the manual to the end customer and make sure that the customer is familiar with its use.

Uhlmann & Zacher GmbH does not assume any responsibility for disruptions or hazards such as non-access to injured personnel, malfunctions, property damage or other damages resulting from non-compliance with this operating and assembly manual or incorrectly configured door handles.

- If there are still any doubts after reading this operating and assembly manual, please contact your respective dealer or Uhlmann & Zacher GmbH directly.

## 1.1 Warnings

Warnings warn against hazards that may arise when using the door handle. There are two levels of warning that can be identified by the signal word:

| Signal word | Significance |
|---|---|
| CAUTION | Indicates a hazard with a low risk that can lead to mild or moderate injury if not avoided. |
| ATTENTION | Indicates a hazard that results in property damage. |

## 1.2 Symbols

The following symbols may be used in this manual:

- This symbol indicates an instruction that must be followed by the user.
- This symbol indicates an entry in a list.

This symbol indicates useful and important information.

# 2 Safety

## 2.1 Proper use

The electronic door handle CX2172 is intended to be installed in building doors and for opening the doors. It is compatible with the commonly used European standards for locks.

The different versions allow it to be used in all the common doors such as wood, steel and aluminum doors as well as doors with narrow frames having a backset of more than 30 mm.

The CX2172 can be used in interior as well as exterior areas (depending on the product version).

## 2.2 Improper use

The CX2172 should not be used for locking up supplies required in case of emergencies (for example defibrillator, emergency medication, fire extinguishers, etc.).

## 2.3 General safety instructions

Follow these basic safety instructions when using the door handle:

- Installation and battery replacement should only be done by qualified technicians according to the instructions in this operating and assembly manual.
- Do not use the door handles in potentially explosive areas.
- Do not make any kind of modifications to the door handles, with the exception of those described in this operating and assembly manual.
- Do not apply paints or acids to the door handles.
- Do not heat the door handle and battery beyond the specified storage temperature.
- Use only original spare parts and accessories from Uhlmann & Zacher to prevent malfunctions and damages.
- Only use batteries procured from Uhlmann & Zacher.

# 3 Product description

## 3.1 Functional description

The electronic door handle CX2172 is a product in the Clex private system. The reading unit, the communication electronics, the mechanical system and power supply, are integrated within the door handle.

Different transponder carriers can be used as key in the CX2172, for example, ISO card or key fob.

CX2172 has the following system properties:

- Up to 1,000 key/locking authorizations can be stored
- Up to 128 events in the fitting can be recorded*
- Up to 32 holidays can be configured*
- Automatic summer and winter time changeover*
- 15 weekly schedules can be programmed*
- Permanent engagement possible without additional power consumption
- Engagement time can be programmed from 1 to 15 seconds
- Can be connected to the IDS module CX6934
- Pre-configured by default for 868 MHz wireless networking
- Inner fitting fixed mechanically (only for one-sided electronic authorization)
- Different handle shapes available
- Suitable for all doors having a thickness of 30 mm to 110 mm
- Square thickness of 7 mm, 8 mm, 8.5 mm, 9 mm and 10 mm are available
- No cabling required
- Can be combined with other systems (for example Clex prime)
- Version for MIFARE® Transponder can be supplied
- Optional administration with the CX2530 Keyng software

### 3.1.1 Battery management

The electronic door handle CX2172 comes with a battery management system, which indicates the need for battery replacement by means of a visible and audio signal when the battery power reduces (capacity loss) during the last 1,000 operations of battery (see chapter 7.2.1 battery replacement).

The signal is given out in two phases:

**Phase 1** The battery needs to be replaced soon.

If an authorized key is held in front of the reading unit, then the engaging of the door handle is accompanied with flashing of red light (5 times) and 5 short audible signals.

**Phase 2** The battery should be replaced immediately.

If an authorized key is held in front of the reading unit, then the red LEDs flash (5 times) accompanied by 5 short audible signals. The engaging of the door handle is delayed by 5 seconds, during which time the green LEDs flash.

The access data, the event log, the settings of the door handle and the time are stored in the non-volatile memory and are thus retained even without power supply, for example when changing the battery or if the battery is completely drained. The time is written to the non-volatile memory once every 30 minutes. When the power supply is disrupted, the clock stops after a few seconds and continues from the last saved value once the power supply is restored.

* When using CX2530 Keyng

### 3.1.2 Event log

The last 128 events of the door handle are stored in the event log.

Event logging can be enabled or disabled for each door handle individually, to be able to comply with specific data privacy guidelines.

The event log can be read using Keyng CX2530.

## 3.2 Design

### 3.2.1 One-sided electronic authorization

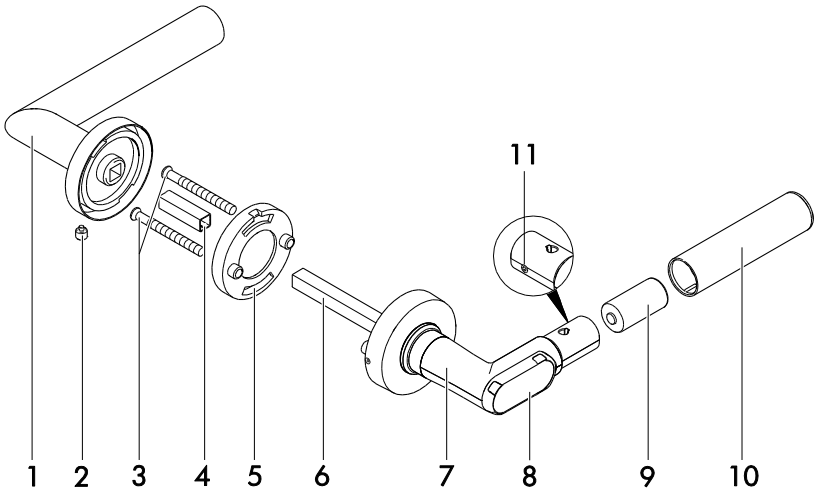


| | | | |
|---|---|---|---|
| 1 | Mechanical door handle | 7 | Electronic door handle |
| 2 | Locking screw | 8 | Reading unit |
| 3 | Mounting screw | 9 | Battery |
| 4 | Adapter sleeve (only for 7-mm-square pin) | 10 | Gripping sleeve |
| 5 | Handle holder (with bayonet lock) | 11 | Grub screw for gripping sleeve |
| 6 | Square pin | | |

### 3.2.2 Two-sided electronic authorization

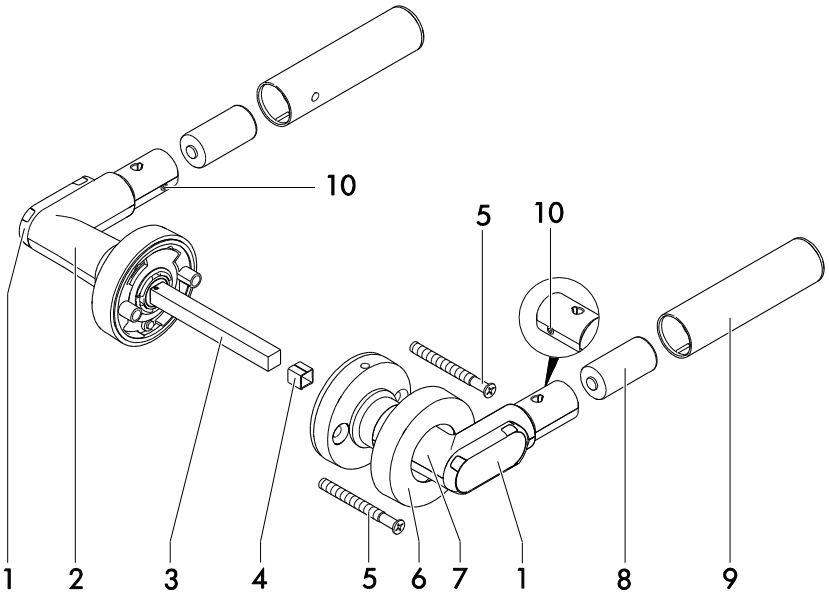


| | | | |
|---|---|---|---|
| 1 | Reading unit | 6 | Rosette cover |
| 2 | Electronic door handle (outside) | 7 | Electronic door handle (inside) |
| 3 | Square pin | 8 | Battery |
| 4 | Adapter sleeve (only for 7-mm -square pin) | 9 | Gripping sleeve |
| 5 | Mounting screw | 10 | Grub screw for gripping sleeve |

## 3.3 Versions

Different handle shapes and versions are available:

- Door handles in L-shape or U-shape

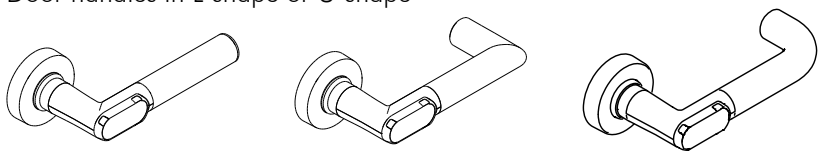

- One or two-sided electronic authorization
- For door hinged on the right or left
- For inside or outside use
- Various square sizes (7 mm, 8 mm, 8,5 mm, 9 mm, 10 mm)

## 3.4 Scope of supply

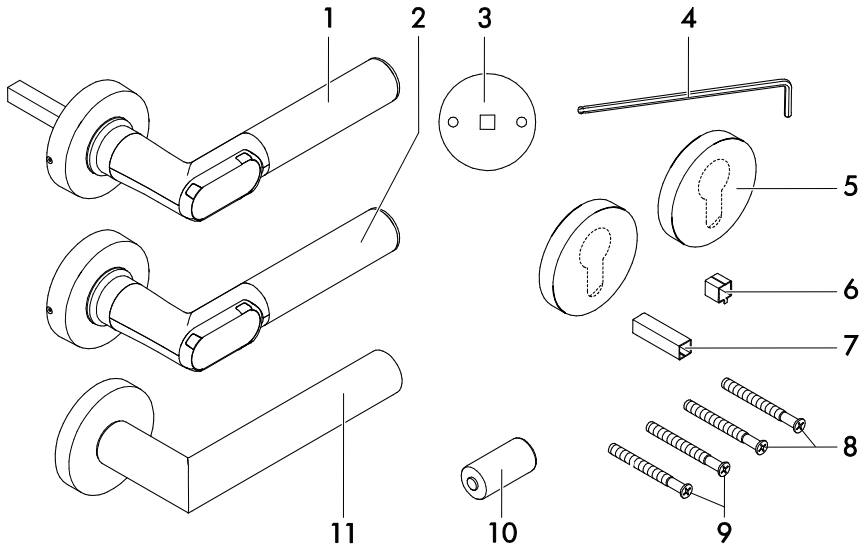


1 Electronic door handle including
- rosette
- Square
- Sealing ring (only for outdoor version)

2 Electronic door handle (only for two-sided electronic authorization) including
- rosette
- Sealing ring (only for outdoor version)

3 Drilling template

4 2mm Allen key (1 per order)

5 Optional: key rosettes (blind cover or with PZ hole)

6 Adapter sleeve for square in case of two-sided electronic authorization (only for 7 mm square)

7 Adapter sleeve for square in case of one-sided electronic authorization (only for 7 mm square)

8 Mounting screws for door handle (M5)

9 Optional: Mounting screws for key rosettes (M4)

10 Battery

11 Mechanical door handle (only for one-sided electronic authorization)

## 3.5 Technical data

### 3.5.1 General technical data

| Description | Value |
|---|---|
| Diameter of rosette | 55 mm |
| Swivel angle | 45° |
| Transponder | MIFARE® Classic<br>MIFARE® DESFire®<br>active transponder (868 MHz)) |
| Power supply | CR123A 3V battery (1 piece) |
| Battery life | up to 150,000 operations or 10.0 years |
| Power consumption in standby mode | 0.06 mW |

### 3.5.2 Ambient conditions

| Description | Value |
|---|---|
| Operating temperature | +5°C to +55°C (indoor version)<br>-25°C to +65°C (outdoor version) |
| Storage temperature | -40°C to +65°C |
| Maximum relative humidity (door handle) | Up to 95% non-condensing |
| Place of installation | Inside or outside (depending on the product model) |
| Protection class | IP66 (outdoor version; being prepared) |

### 3.5.3 Dimensions

**L-shape electronic side**

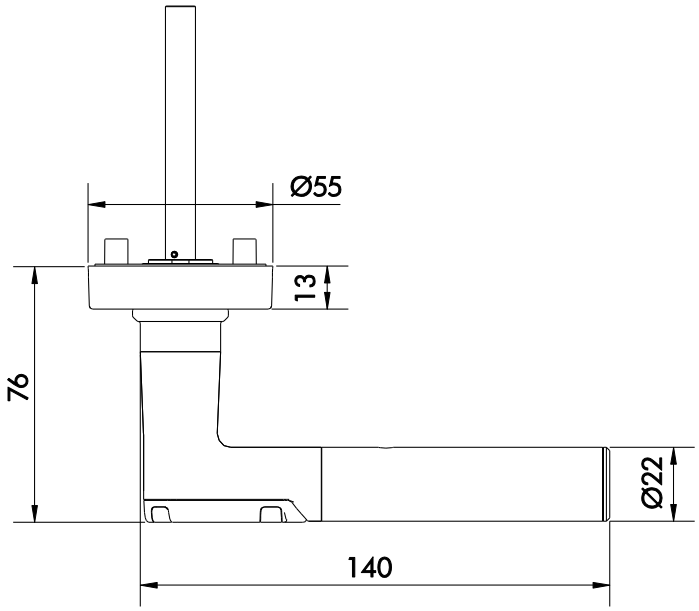


**L-shape mechanical side**

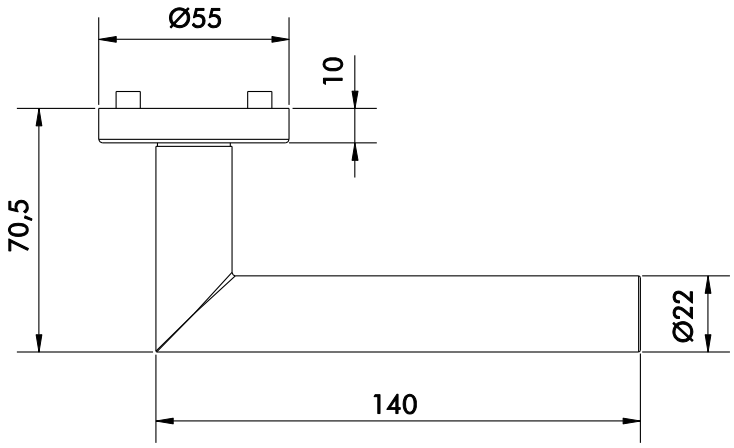

**U-shape electronic side**

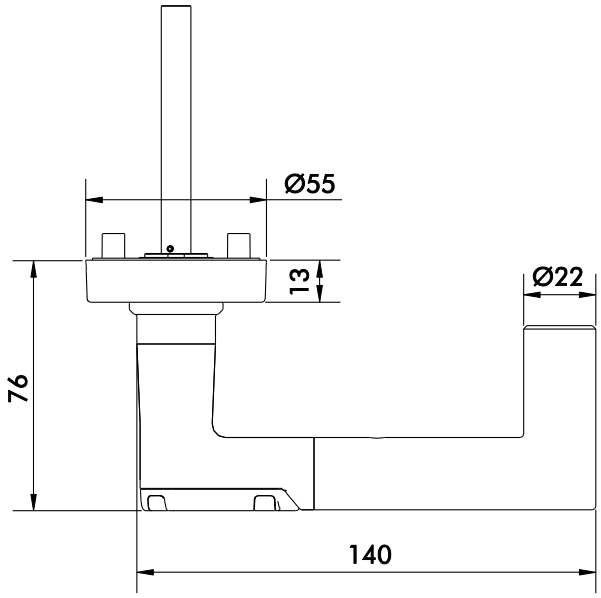


**U-shape mechanical side**

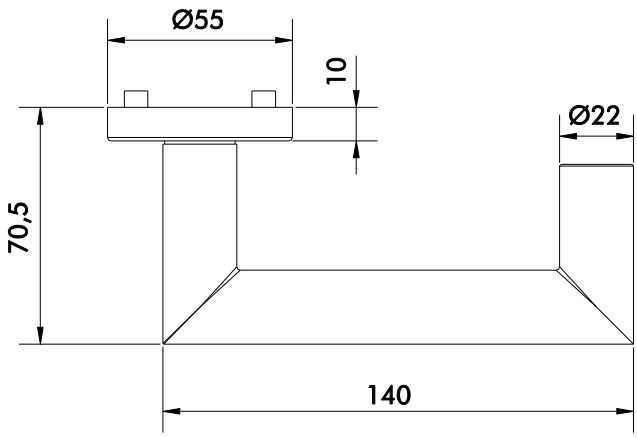


## 3.6 Standards

The electronic door handle CX2172 meets the following standards:

- EN 300 220 V2.4.1
- EN 302 291 V1.1.1
- EN 301 489-1 V1.9.2
- EN 55022:2010
- EN 61000-6-1:2007
- EN 61000-6-3:2007
- EN 60950-1:2006 + A11:2009 + A1:2010 + A12:2011 + AC:2011 + A2:2013
- EN 62479:2010
- Directive 1999/5/EG

## 3.7 Management accessories

### 3.7.1 CX2530 Keyng

Using the CX2530 Keyng administration software, it is possible to manage the Clex private electronic locking system conveniently from the PC. In contrast to the well-known learning - clearing system, the software provides a wide range of functions.

The communication between the locking units and the administration software takes place using a USB radio stick.

### 3.7.2 Service key

Using the service key, a user identifies himself as an administrator of the locking system. If this key is held in front of a locking system component, then the respective component goes into service mode, where it is possible, for example, to create or change authorizations, make settings or to read the event log.

# 4 Assembly

## 4.1 Assembly instructions

**ATTENTION**

Damage of the door handle by using mounting screws of wrong length

- The rosette of the electronic door handle can be damaged if the mounting screws are too long!

### 4.1.1 General assembly instructions

- Carry out the assembly necessarily with the door open.
- Ensure that the latches or seals fitted to the door do not hinder the proper operation of the CX2172.
- Ensure that the door handle does not protrude and prevent the door from swinging freely.
- Before assembling the door handle, always check whether all the components can move freely.
- After assembly, check the function with the door open.

### 4.1.2 Drilling template

The drilling template supplied is used to mark the drilling holes.

There should be a distance of at least 38 mm between the two drilling holes for the handle rosette and for the key rosette.

## 4.2 Assembly

### 4.2.1 Assembly of the square pin

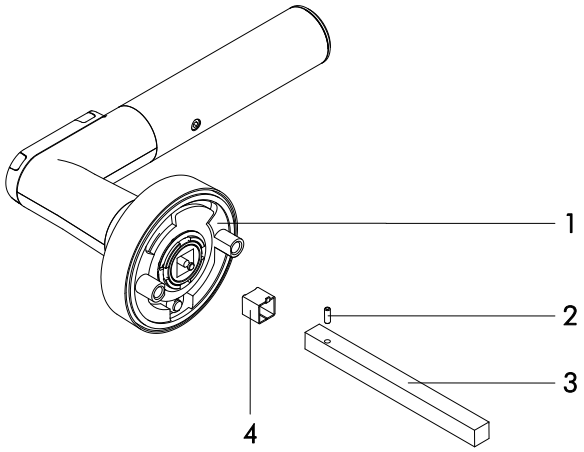


1 Electronic door handle

2 Spiral pin

3 Square pin

4 Adapter sleeve (only for 7-mm-square pin)

- Insert adapter sleeve in square pin fixture (if required)
- Insert square pin completely on fixing pin and in square pin fixture
- Insert spiral pin in square pin

### 4.2.2 One-sided electronic authorization

- Insert the square pin of the electronic door handle into the square nut of the lock.

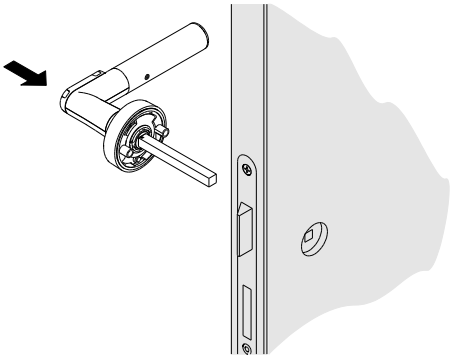

- Place the drilling template on the square pin, align horizontally and center punch the hole markings.

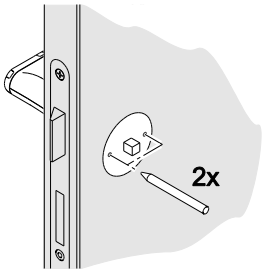


- Remove the square pin again.
- Drill holes of diameter 8 - 8.5 mm at the marked positions. Do not drill into or through the lock casing.

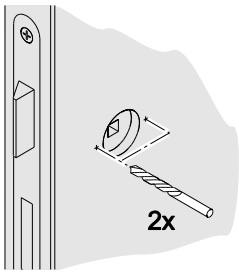


- Insert the square pin of the electronic door handle once again into the square nut of the lock. If necessary, place the adapter sleeve supplied on the square pin.

- Insert the handle holder of the mechanical door handle from the other side and screw it along with the electronic door handle through the door panel. Please use the supplied mounting screws.

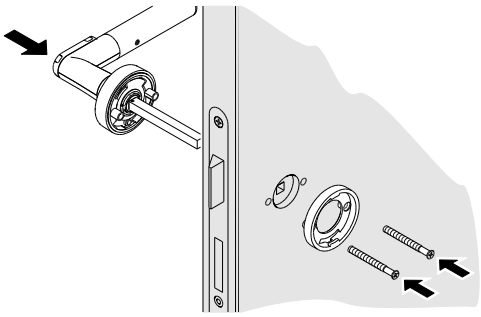

- Insert the mechanical door handle keeping it in a horizontal position. For door handles pointing to the right, tighten the rosette towards the left, guide it over the handle holder and engage the bayonet lock. Accordingly, tighten the rosette towards the right for door handles pointing to the left.

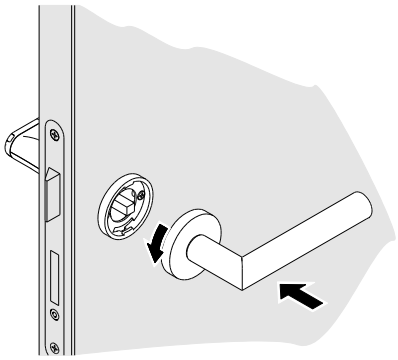

- Insert the locking screw from the bottom of the rosette and tighten it.

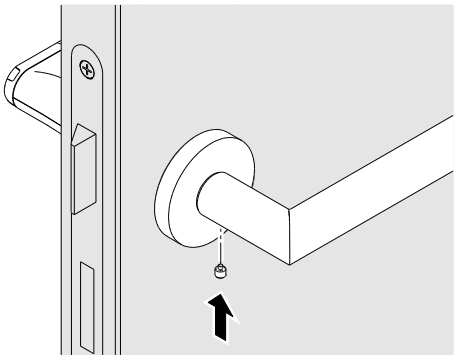

- To operate the door handle, insert the battery and close the housing (see chapter 7.2.1 Battery replacement).
- Check the functionality and easy movement of the door handle with the door open. To do this, hold an authorized key in front of the reading unit.
  When engaged, the catch of the lock should be completely inside the lock casing when the latch is pressed down.
  After holding up an authorized key for the first time, only the two upper LEDs light up as an indication.

### 4.2.3 Two-sided electronic authorization

- Insert the square pin of the outer electronic door handle into the square nut of the lock.

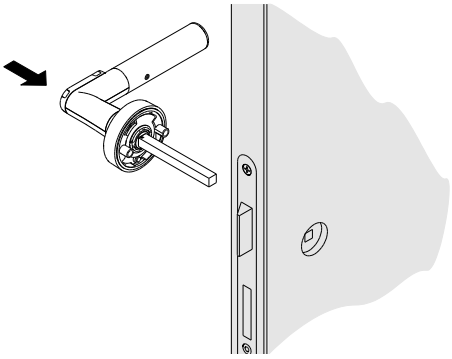

- Place the drilling template on the square pin, align horizontally and center punch the hole markings.

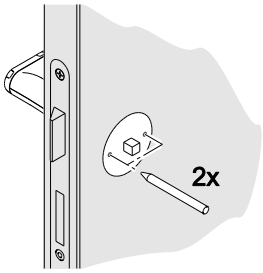


- Remove the square pin again.
- Drill holes of diameter 8 - 8.5 mm at the marked positions. Do not drill into or through the lock casing.

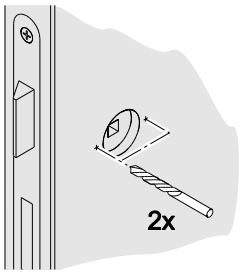


- Insert the square pin of the outer electronic door handle once again into the square nut of the lock. If necessary, place the adapter sleeve supplied on the square pin.
- Check the extent to which the square pin protrudes out of the door panel and shorten it if required, in order to completely insert the inner electronic door handle. The square pin should protrude 6 mm ± 0.5 mm over the door panel, to ensure proper functioning.

- Retract the rosette cover of the inner electronic door handle to the maximum extent and screw both the electronic door handles together through the door panel. Please use the supplied mounting screws.

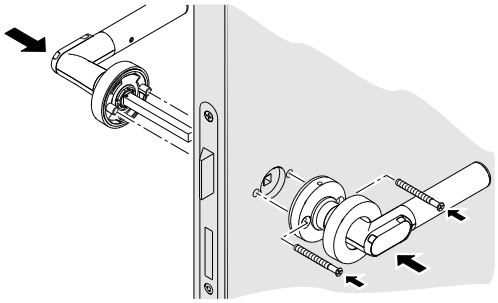

- Place the rosette cover.

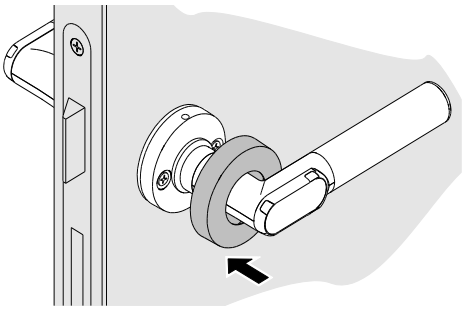

- To operate the door handle, insert the battery and close the housing (see chapter 7.2.1 Battery replacement).
- Check the functionality and easy movement of the door handle with the door open. To do this, hold an authorized key in front of the reading unit.
  In the engaged condition, the catch of the lock should be completely inside the lock casing when the latch is pressed down.
  After holding up an authorized key for the first time, only the two upper LEDs light up as an indication.

### 4.2.4 Assembling the key rosette

- Place the drilling template, align horizontally and center punch the hole marks.
- Drill holes of diameter 7 - 7.5 mm at the marked positions. Do not drill into or through the lock casing.
- Screw both the key rosettes together through the door panel.

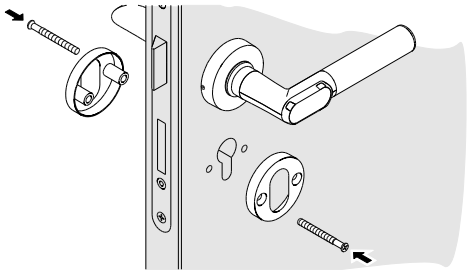

- Place the rosette covers and press firmly until the engage audibly.

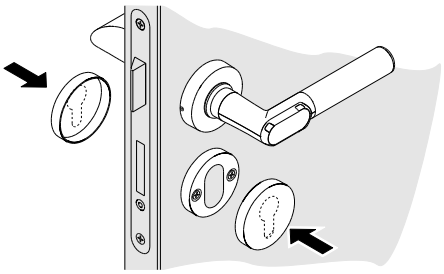

# 5 Commissioning

Generally there 2 ways to manage a Clex private locking system:

- Administration as learning – clearing system
- Administration with the CX2530 Keyng software

## 5.1 Teach-in the service key

When delivered the electronic door handle does not know its service key. To teach-in the service key the door handle has to be activated, for example by holding a key in front of the reading unit. 3 long audible signals indicate success. Within 15 seconds hold the service key in front of the reading unit. If the teach-in is successful this is indicated by 2 short and 1 long audible signal.

After the teach-in the service key starts the service mode when held before the reading unit.

## 5.2 Administration as learning – clearing system

### 5.2.1 Teach-in key

- Hold the service key in front of the reading unit of the door handle to switch the door handle to the service mode.
- Hold key to teach-in in front of the reading unit, until 2 short audible signals indicate success.
- Optional: Teach-in further keys as described in the previous step.
- Hold up service key to the reading unit or wait for 15 seconds to end the service mode.

To create a key with toggle authorization, hold the key in front of the reading unit for 3 seconds during teach-in, until 3 short audible signals indicate success.

### 5.2.2 Delete key

- Hold the service key in front of the reading unit of the door handle to switch the door handle to the service mode.
- Hold key to delete in front of the reading unit, until 2 long audible signals indicate success.
- Optional: Delete further keys as described in the previous step.
- Hold up service key to the reading unit or wait for 15 seconds to end the service mode.

### 5.2.3 Delete all keys

- Hold the service key in front of the reading unit of the door handle to switch the door handle to the service mode.
- Keep the service key there until the service mode ends.
- Within 60 seconds activate the service mode again and keep the service key in front of the reading unit. While the service key is still the, the door handle indicates success by short audible signals.
- When the service mode has ended after 15 seconds all keys are deleted.

## 5.3 Administration with Keyng CX2530

The CX2530 Keyng software offers a convenient way to manage the electronic locking system.

For additional information, refer to the documentation on CX2530 Keyng.

## 5.4 Changing the settings

The following settings can be changed using the CX2530 Keyng software:

- Time
- Event log on / off
- Engagement time (defines the time for which the door handle remains engaged after holding up an authorized key)
- Wake up sensitivity
- Radio response of the door handle (wake-on-radio mode)

# 6 Operation

The electronic door handle operates only the latch. Hence, it should be ensured that the locking cylinder of the door is unlocked or the door is not locked in some other manner. Otherwise, the door cannot be opened even after holding up an authorized key.

## 6.1 Automatic wake up

The door handle is in sleep mode as long as it is not used. To check the authorization of a key, it needs to be woken up from the sleep mode. This normally happens automatically if a key is held in front of the reader unit.

If, however, the electronic door handle has been woken up 24 times (for example by metallic objects in the surroundings) without reading a key, then automatic wake up is disabled.

In this case, the door handle has to be woken up manually.

- Press the door handle a few times to wake up the reading unit until an LED starts glowing.
- Hold up an authorized key in front of the reading unit only after this.

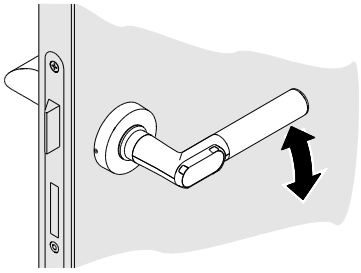

Automatic wake up is enabled once again by reading an authorized key.

In addition, the wake up sensitivity (that is the number of times the door handle needs to be pressed to wake up the reading unit) can be set.

## 6.2 Opening the door

Prerequisite: Handle is in horizontal position.

- Hold the authorized key in front of the reading unit until the green LED starts glowing.

The door handle engages and the door can be opened by pressing the door handle.

The time duration for which the door handle remains engaged can be set (1 to 15 seconds, the default value is 5 seconds). After successful authorization (engaging) at the door handle, the engagement time expires. The engagement-time timer is reset as soon as the door handle is pressed.

The door handle disengages after the configured engagement time, if it is not pressed or when it is pressed and held.

The door handle disengages immediately, if it is released.

## 6.3 Toggling the door handle

- Hold the key with toggle authorization for two cycles in front of the reading unit.

Depending on the initial state, the door handle either engages or disengages permanently.

## 6.4 Indications

| Function | Signal (audible and visible) and explanation |
|---|---|
| Sleep mode | No audible or visible signal |
| Start of service mode | — • <br> Long audible signal followed by a short audible signal |
| End of service mode | • — <br> Short audible signal followed by a long audible signal |
| Key learned | • • <br> 2 short audible signals, green LEDs start glowing |
| Key deleted | — — <br> 2 long audible signals, red LEDs start glowing |
| Reading mode (after wake-up) | <br> Red LEDs are flashing |
| Key is not authorized | — <br> Long low audible signal, red LEDs start glowing |
| Key is authorized | <br> Green LEDs start glowing |
| Time changeover / toggling On | — <br> Long high audible signal, green LEDs start glowing |
| Time changeover / toggling Off | — <br> Long high audible signal, red LEDs start glowing |
| Reset | — <br> Long low audible signal, all the LEDs are switched on briefly one after the other |
| Battery warning phase 1 | • • • • • <br> 5 brief high audible signals, red LEDs flash 5 times simultaneously |
| Battery warning phase 2 | • • • • • 5 s <br> 5 brief high audible signals, red LEDs flash 5 times simultaneously, then 5 seconds engagement delay, green LEDs start flashing at the same time |
| Hold up authorized key with door handle pressed | • • • <br> No engagement, 3 brief high audible signals, then green LED flashes once |

# 7 Cleaning and maintenance

## 7.1 Cleaning

- Clean the door handle only with a commercially available household cleaning agent and a damp cloth.
- Do not use any abrasive or caustic cleaning agents.

## 7.2 Maintenance

### 7.2.1 Replacing the battery

**⚠ CAUTION**

Danger of injury caused by improper use

- Do not charge, open or heat the battery.
- Always replace discharged batteries with new batteries.
- Pay attention to the correct polarity when inserting the batteries.

Change the battery only with the door open. As long as the battery is removed, the door handle cannot engage and thus cannot open the door.

- Using the Allen key provided, countersink the screw on the inside of the door handle.

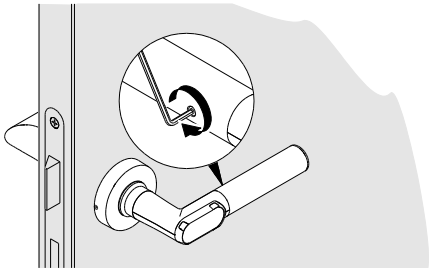

- Remove the gripping sleeve.

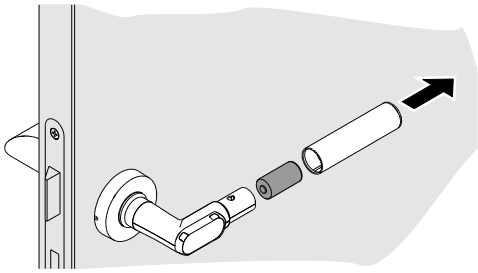

- Remove the used battery and insert the new battery, paying attention to the polarity. Insert the battery into the gripping sleeve with the negative pole first.
- If the door handle is used outside, then replace the sealing ring of the door handle (see chapter 7.2.2 Replacing the sealing ring, page 25).
- Slide the gripping sleeve back on.
- Unscrew the screw on the inside of the door handle until the stop, so that the gripping sleeve cannot be removed.

- When administrating the locking system with the Keyng software check the time on the door handle using CX2530 Keyng and adjust if necessary.

### 7.2.2 Replacing the sealing ring

**ATTENTION**

Damage to the sealing ring caused by improper handling

- Do not use any sharp objects and do not stretch the sealing ring more than what is required for mounting.

Prerequisite: Gripping sleeve is removed (see chapter 7.2.1 Replacing the battery, page 24)

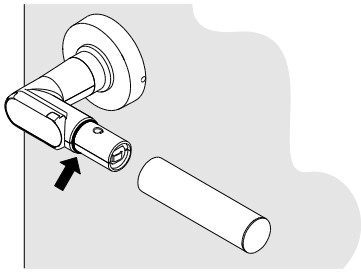

- To remove the sealing ring, hold down the sealing ring on one side with the thumb and slide the fingernail of the middle finger on the opposite side. The sealing ring can then be gripped with the index finger.
- Insert a new sealing ring.

# 8 Faults during operation

## 8.1 Fault indications

| Function | Audible signal | Explanation |
|---|---|---|
| Memory fault / configuration fault | — — — — — • | 5 long audible signals, 1 brief audible signal |
| Engaging fault | — — — — — • • | 5 long audible signals, 2 brief audible signals |
| RTC fault (clock) | — — — — — • • • | 5 long audible signals, 3 brief audible signals |
| Internal fault (unhandled interrupt) | — — — — — • • • • | 5 long audible signals, 4 brief audible signals |
| Internal fault (Bus conflict) | — — — — — • • • • • | 5 long audible signals, 5 brief audible signals |
| Internal fault (Bus conflict) | — — — — — • • • • • • | 5 long audible signals, 6 brief audible signals |
| Internal fault (Bus conflict) | — — — — — • • • • • • • | 5 long audible signals, 7 brief audible signals |

- If the faults mentioned above occur repeatedly, please contact the concerned dealer.

# 9 Disassembly and disposal

## 9.1 Disassembly

### 9.1.1 One-sided electronic authorization

- Unscrew the locking screw at the bottom of the rosette.

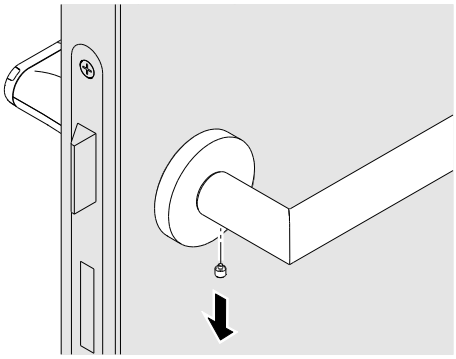

- Loosen the bajonet lock. To do this, tighten the rosette to the left for door handles pointing to the right and remove the mechanical door handle from the square pin. Accordingly, tighten the rosette towards the right for door handles pointing to the left.

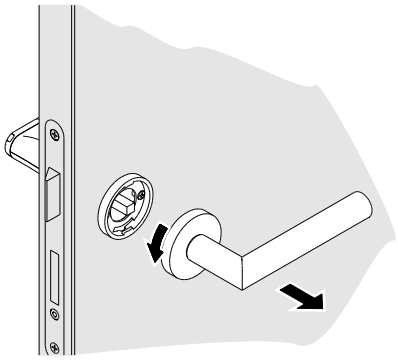

- Unscrew the handle holder. Remove the electronic door handle from the lock.

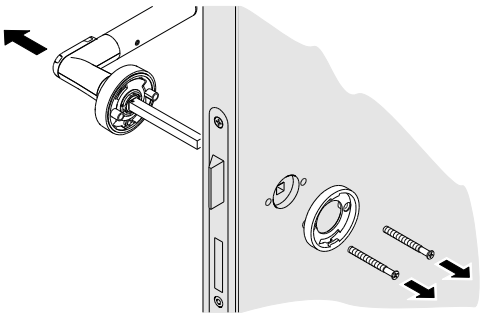

### 9.1.2 Two-sided electronic authorization

- Lift the rosette cover on the inner electronic door handle using a small screwdriver and pull it back as far as possible.

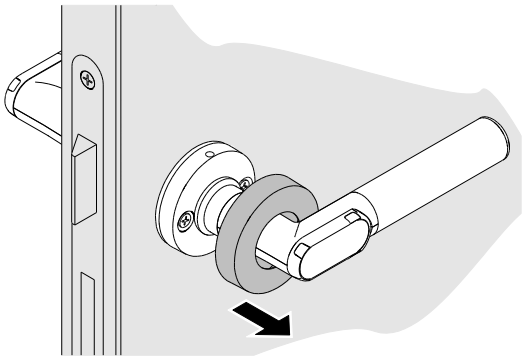

- Loosen the mounting screws. Remove the inner electronic door handle from the square pin. Remove the outer electronic door handle from the lock.

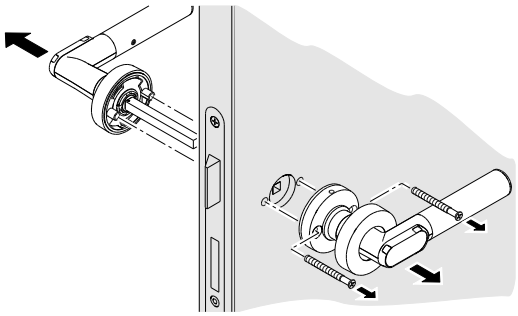

### 9.1.3 Disassembly of the square pin

In the case the edge length of the square pin does not match the lock or to shorten the square pin it can be necessary to disassemble the square pin.

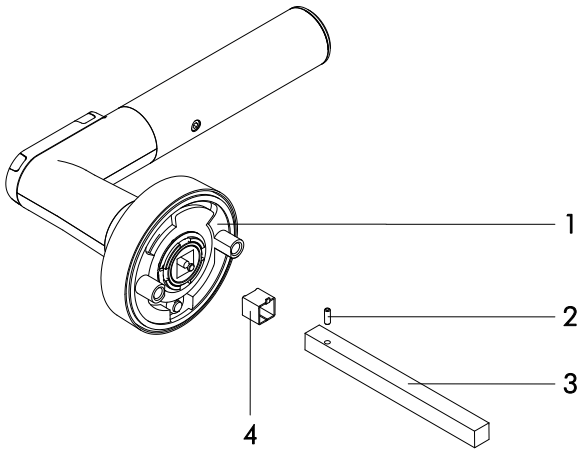


1 Electronic door handle

2 Spiral pin

3 Square pin

4 Adapter sleeve (only for 7-mm-square pin)

- Push spiral pin out of the square pin
- Pull the square pin out of its fixture
- Remove adapter sleeve from square pin fixture (if required)

## 9.2 Disposal

- Do not dispose the door handle with domestic waste. Disposal should be in accordance with the European Directive 2002/96/EC at a collection point for electrical waste.
- Defective or used batteries should be recycled in accordance with the European Directive 2006/66/EC.
- Follow the local regulations on separate disposal of batteries.
- Recycle the packaging in an eco-friendly manner.

# 10 FAQ

## 10.1 Door handle is not reaching at-rest position

If the electronic door handle is not reaching its horizontal at-rest position by itself, the reason is possibly the misalignment of the lock. This can be compensated by widening the drill holes to a diameter of 8 to 8.5 mm. The door handle can now be mounted without tension.

# 11 Glossary

| Definition | Description |
|---|---|
| IDS | Intrusion detection system |
| Keyng | Software for managing a locking system |
| MIFARE® | Technology for contactless transfer of identification data |
| Key | Data carrier that contains the authorization information. This can, for example, be an ISO card or a chip. The key is sometimes also known as transponder. |
| Service key | Special key using which a user can identify himself as the administrator of the locking system (see chapter 3.7.2 Service key, page 13) |
| Toggling | Permanently engaging a door handle, so that the door can be opened without a key. |
| Transponder | See key |
| WoR | Wake-on-radio (radio response of a door handle) |